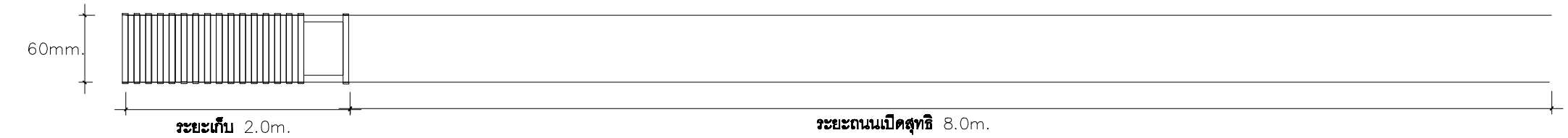

FULLY OPEN – TOP VIEW

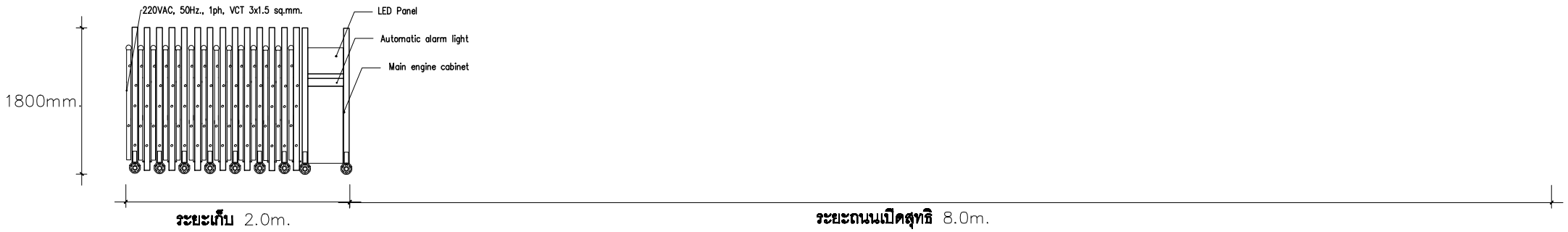

FULLY OPEN – FRONT VIEW

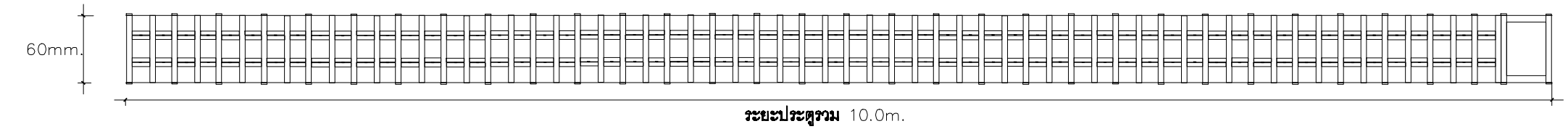

FULLY OPEN – FRONT VIEW

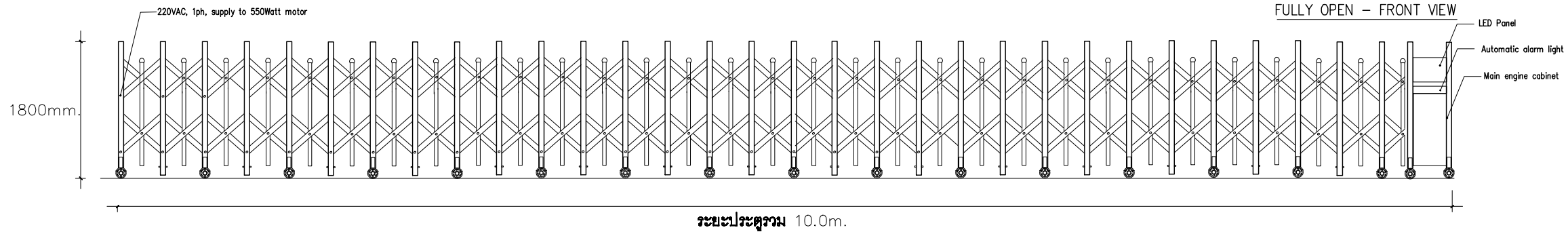

FULLY OPEN – FRONT VIEW

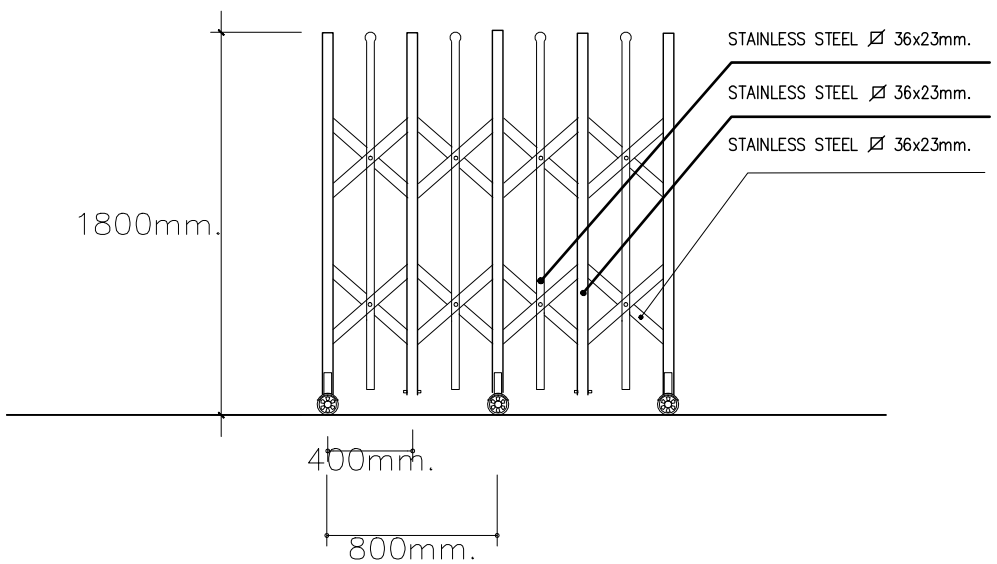

DETAIL A

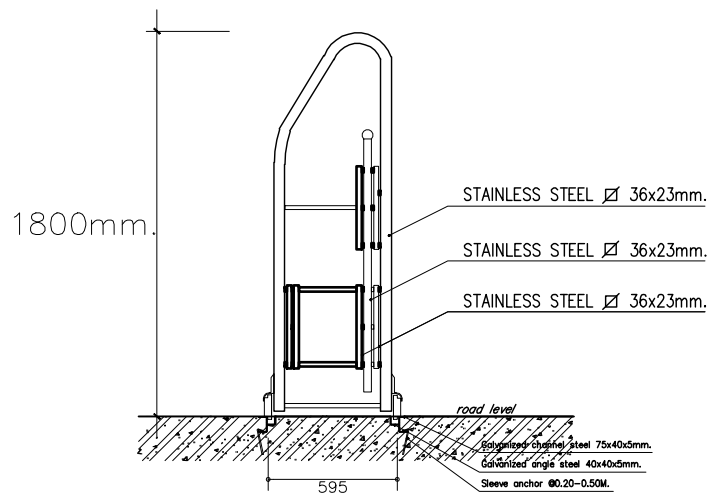

DETAIL B

FOLDING GATE MODEL : FG–R2X–304
FOLDING GATE LENGTH : 10.0m.
www.foldinggate.co.th, tel.02–9843525